Roam Mobile Whiteboard

Product Specifications

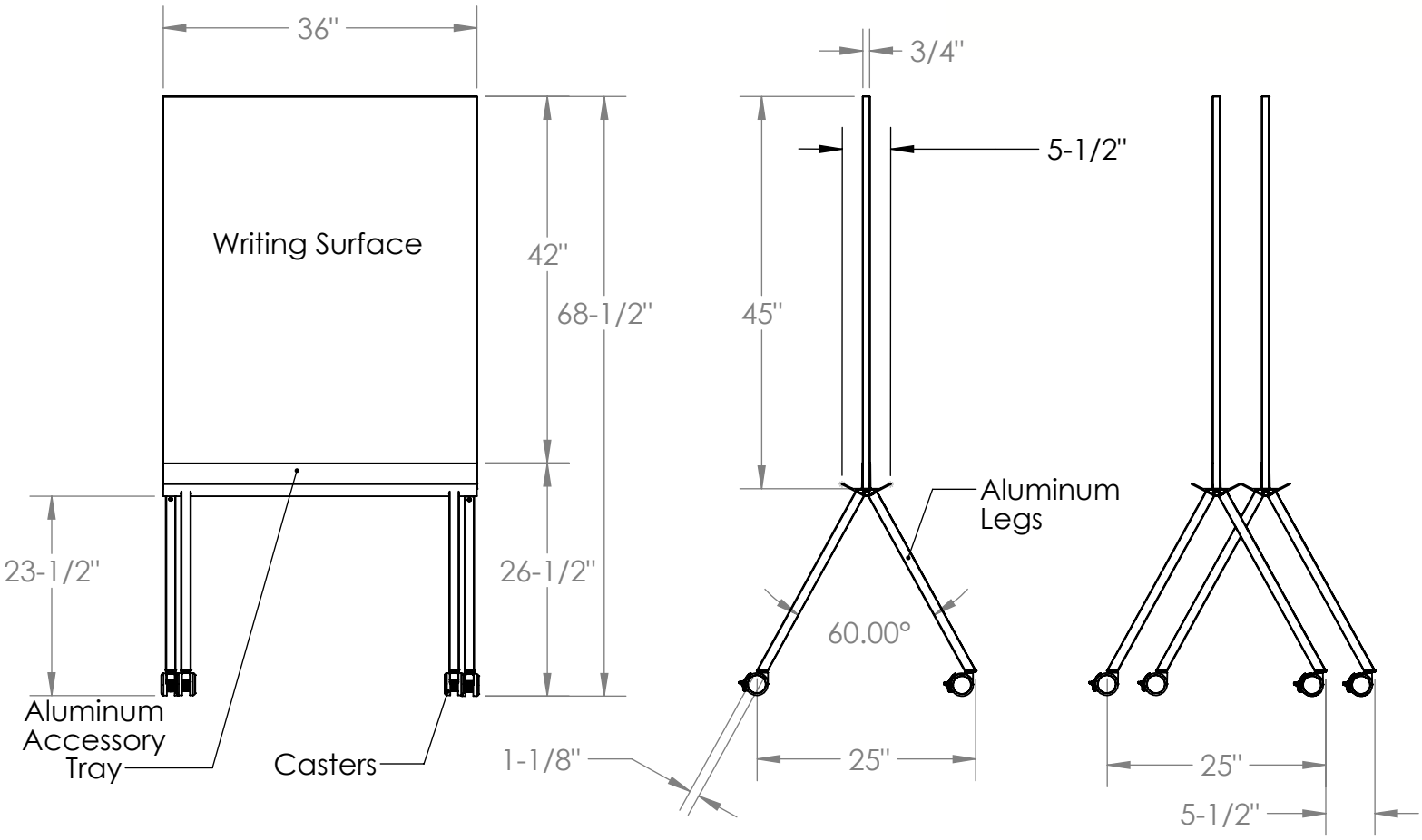

Materials:

- Framework: 11/16" x 1-3/8" Satin anodized aluminum tubing
- Board Surfaces: 1/32" dry erase, high pressure laminate
- Casters: ABS plastic with a ring stem
- Extrusion Cap: White ABS plastic
- Accessory Tray: satin anodized aluminum extrusion
- Legs: 1-1/8" Square satin anodized aluminum tubing
- Edgebanding: white 8 mil PVC edgeband
- Core Panel: 3/4" birch plywood

Features:

- Lightweight aluminum frame surfaced in a non-ghosting, dry erase high pressure laminate
- 36" x 42" edge to edge double sided writing surface
- Double sided accessory tray
- 4 locking casters
- Straight on nesting allows boards to rest in a single footprint
- Board is guaranteed for 10 years

Notes:

- Some assembly required
- For indoor use only
- Writing surface is non-magnetic