DATE	REV	DESCRIPTION	BY	CHKD
2022.11.09	A/0	NEW	LMF	

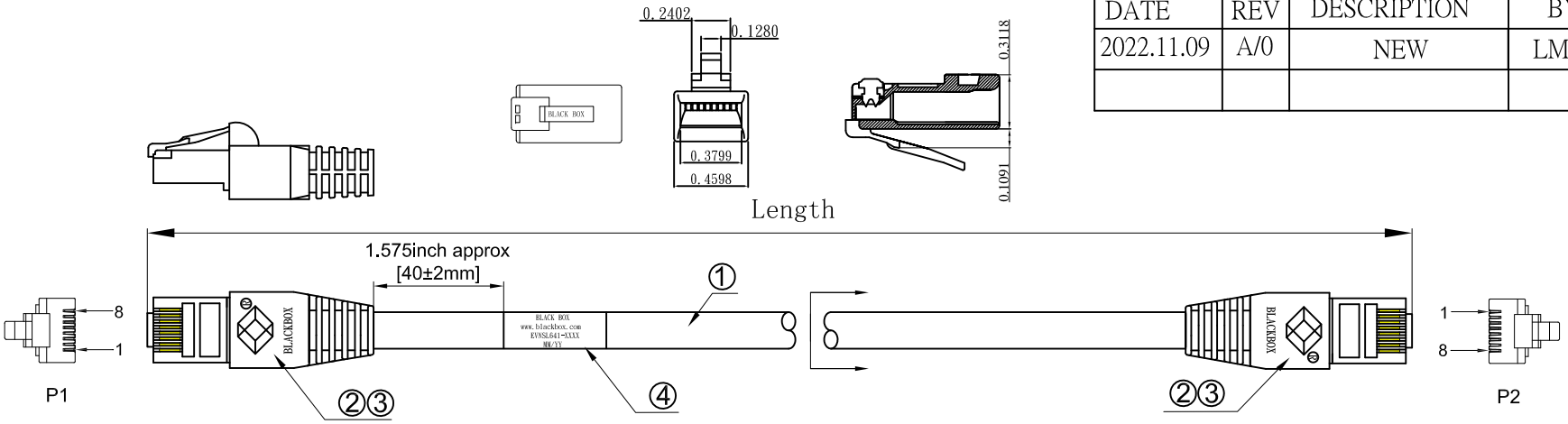

Marking:BLACK BOX CORPORATION --- GIGATRUE CATEGORY 6 --- TESTED TO 550MHZ --- ▲ E196163-Y CM (UL) c(UL) UTP 60 ℃ 4PR
24AWG STR ▲ 3P VERIFIED TO ANSI/TIA-568.2-D MM-YY

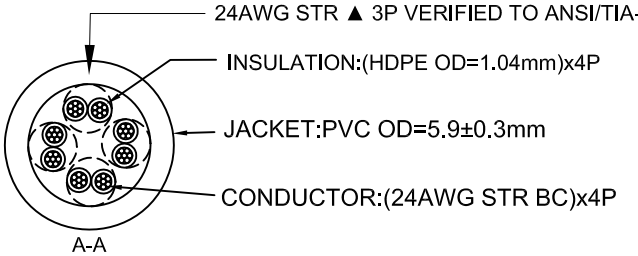

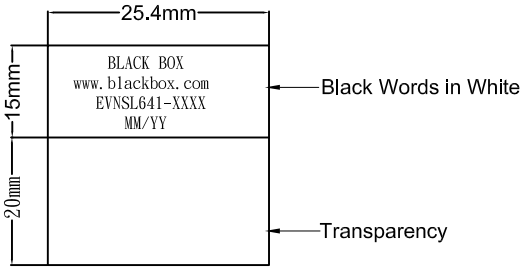

LABEL

Conductor		Bare Copper 24AWG 7/0.00772inch approx
Insulation		Thickness:MIN at any point:0.0059inch MAX AVG:0.0098inch Diameter:0.0409inch approx
Jacketing	PVC	Thickness:MIN at any point:0.0236inch MAX AVG:0.0256inch Diameter:0.2323inch approx
WIRE		CAT.6 UTP Stranded 24AWGX4P
PLUG		Assembly+BOOT 8P8C 50u″(1.27μm) Gold 3 piece plug (film+stand+plug)
COLOR		BLACK

RJ45 Plugs Standard-IEC 60603-7

No.	TITLE	DESCRIPTION	Q'TY
④	Label	Cable Label 35x25.4mm	1PC
③	Boot	Marking “BLACK BOX” Boot PVC 55P OD:6.5mm	2PCS
②	Plug	RJ45 8P8C 50u" Unshielded Marking “BLACK BOX”	2PCS
①	Cable	LAN CABLE Cat.6 U/UTP 24AWGx4P STR PVC CM	A/R

Note:
1.Channel Test
2.100% Test(Open,short,miswire)
3.Contact Resistance:4Ω Max.
4.Insulation Resistance:DC/250V,10 MΩ Min. For 0.01s
5.Hi-pot Test:AC/250V 5mA Max. For 0.01s
6.All Material meet the RoHS2.0，Reach

Attenuation (Maxinmum):39.4dB @250MHZ;62.1dB @550MHZ
Cable Type:4-palr UTP
Conductor Gauge:24AWG, stranded
Frequency:Up to 550MHZ
Impedance:100±15 ohms
NEXT (Minimum):38.3dB @250MHZ;33.1dB @550MHZ
PS-NEXT (Minimum):36.3dB @250MHZ;31.2dB @550MHZ
Return Loss (Minimum):15.3dB @250MHZ;2.98dB @550MHZ
Standards:ANSI/TIA-568.2-D CAT.6 Channel

PINOUT

P1(T568B)	P2(T568B)	WIRE
1	1	WHITE/ORANGE
2	2	ORANGE
3	3	WHITE/GREEN
6	6	GREEN
4	4	BLUE
5	5	WHITE/BLUE
7	7	WHITE/BROWN
8	8	BROWN

Tolerance:
X. ±
.X ±
.XX ±
.XXX ±
Angle:
X° ±
.X° ±

BLACK BOX

Approved by:		P/N:EVNSL647-XXXX	
Drawn by:LMF		Description: Cat.6 UTP #24 CM,with boots	
Date:2022.11.09		DWG. NO:	
Scale:	Unut:mm	AHEET: 1 OF 1	REV:03

GFWC-S220273